FLYING CAM UNITS FOR HEAVY LOAD PIERCE

—MGFVS・MEVSN—

CAM DIAGRAM P.1189

— Without automatic alignment —

MGFVS150 (θ =00-65)

MEVSN150 (θ =00-65)

(Economy type)

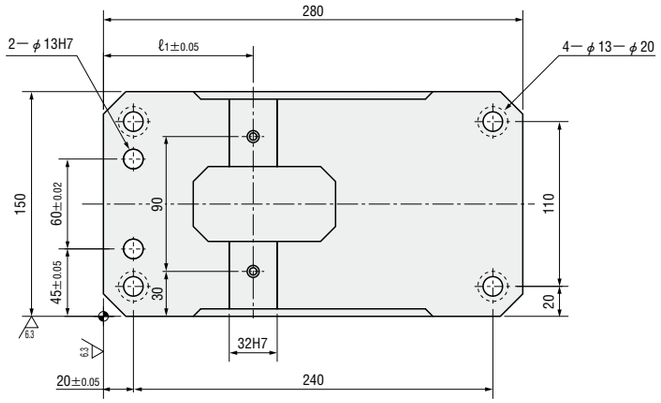

■Rear removal space

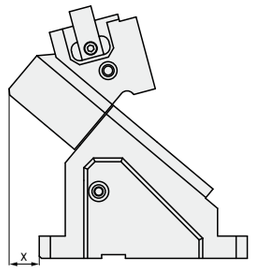

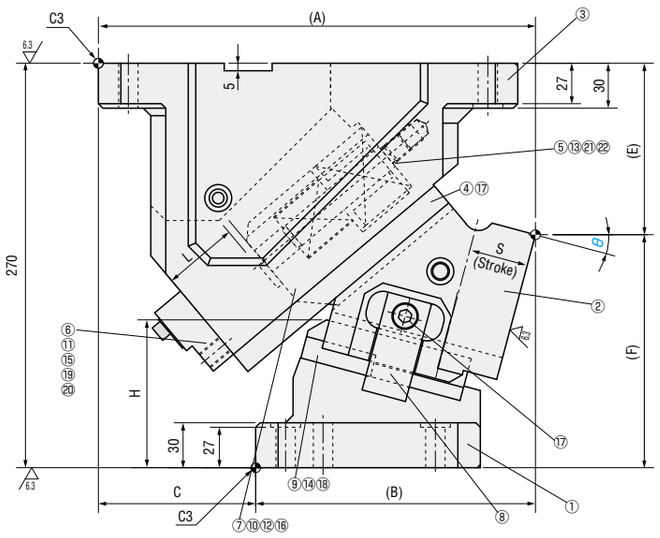

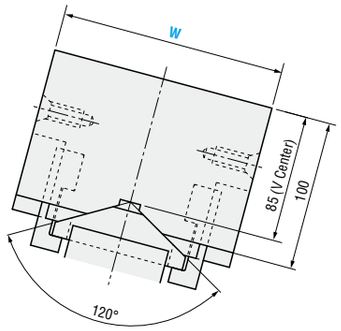

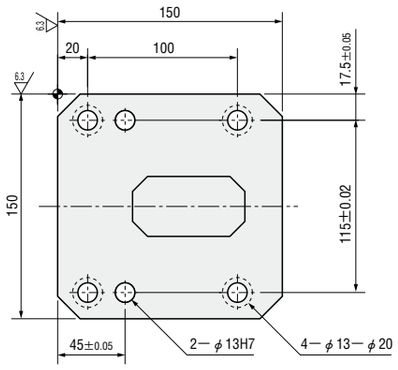

■Components table P.1190

W	θ	A	B	C	E	F	H	L	ℓ1	x
150	00	280	160	120	85	185	94	50	100	20
	05	288.26	173.26	115	95.84	174.16	94			
	10	285.54	180.54	105	102.36	167.64	98.9			41
	15	291.79	186.79		114.47	155.53	98.7			
	20	286.97	196.97	90	122.07	147.93	103.5		135	57
	25	291.02	201.02		135.08	134.92	103.2			
	30	283.92	213.92	70	138.4	131.6	112.8			69
	35	285.66	215.66		151.91	118.09	112.4			
	40	276.2	231.2	45	155.53	114.47	121.9		170	75
	45	275.56	230.56		169.14	100.86	121.4			
	50	263.74	238.74	25	167.65	102.35	137			
	55	260.74	235.74		180.94	89.06	137.6			77
	60	246.6	246.6	0	193.92	76.08	138.2			100
	65	241.35	241.35		206.49	63.51	138.6	40		104

Slide Stroke S	Working force KN (tonf)		Spring load N (kgf)			Total weight kg	Catalog No.	W	θ
	Standard working force	Max. working force	Preload	5mm before bottom dead center	Max. load				
32.1	123.6 (12.6)	185.3 (18.9)	215(21.9)	3822(389.7)	9555 (974.3)	45.4	—Without automatic alignment— MGFVS MEVSN (Economy type)	150	00
32.3				3896(397.2)		45.9			05
38.9				4851(494.7)		44.4			10
39.7				4925(502.2)		44.9			15
46.1				5586(569.6)		43.2			20
47.8				5733(584.6)		43.7			25
54.3				6174(629.6)		42.2			30
57.4				6321(644.6)		42.7			35
64.3				6689(682.0)		41.0			40
69.6				6909(704.5)		41.4			45
77.8				7203(734.5)		40.5			50
87.2				7424(757.0)		40.9			55
98.5				7718(787.0)		41.5			60
93.2			484(49.3)	8012(816.9)		42.2			65

Order — Catalog No. | W | — | θ — MGFVS 150 — 30

Days to Ship — Quotation

Price — Quotation

Alterations — Catalog No. | W | — | θ | — (N12・N16…etc.) — MGFVS 150 — 15 — N12

Alterations	Code	Spec.
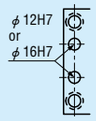	N12	Change dowel hole diameter φ 13H7 ⇨ φ 12H7
	N16	Change dowel hole diameter φ 13H7 ⇨ φ 16H7
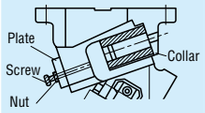	S	With collars, screws and nuts to fix bottom dead center.

Alterations	Code	Spec.
	K	Add 2 locating keys (With 2 hexagon socket head cap screws M8×15) 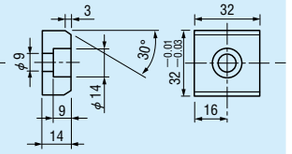
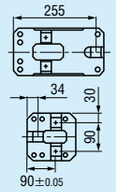	TK	T-keywaying Add 6 locating keys (With 6 hexagon socket head cap screws M8×15)